senapt

senapttrading.com

MEGA X PQ

Empower Your Grid with Perfect Clarity

ELECTRICITY

Powering the Future with Precision and Control

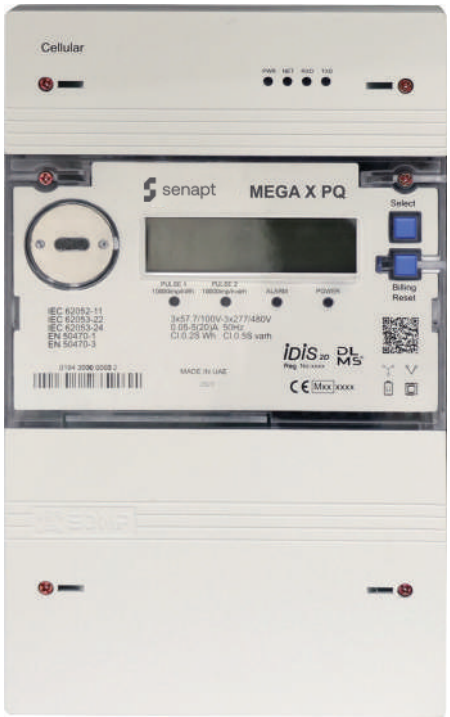

Introducing the **Mega X PQ**, an advanced smart meter specifically designed for power plants, HV and MV Substations, transmission grid, and large industrial applications, with a primary focus on **power quality** monitoring. It exceeds **IEC Class 0.2S** accuracy and **MID Class C** standards, delivering unparalleled precision in power quality measurements. The **Mega X PQ** complies with **IEC 61000-4-30** (Edition 3) for advanced power quality analysis, providing in-depth insights into voltage dips, harmonics, transients, and flicker. With 12kV impulse protection and meeting IEC 62052-31 safety standards, it ensures reliable and safe operation. This meter is perfect for utilities and large industrial customers seeking comprehensive power quality monitoring, offering real-time data and robust performance to optimize grid stability and operational efficiency. The **Mega X PQ** sets a new standard for power quality monitoring in smart metering systems, enabling better decision-making and ensuring grid reliability.

DLMS® | iDIS | POWER QUALITY | MID Measuring Instrument Directive 2014/32/UE

Main Functionalities

Measurement Capabilities	• Measures in 3 elements and 4 quadrants for accurate data across various parameters. • Tracks absolute and differential energy, including Wh, VARh and VAh for comprehensive analysis. • Provides power metrics per phase and total (W, var, VA) and voltage and current RMS values. • Monitors power factor, frequency, and phase angles, with voltage • Current Total Harmonic Distortion (THD), analysis up to the 50th order. • Transformer and line loss compensation • Neutral Current Measurement
Real-Time Clock (RTC)	• Maintains clock accuracy with a daily deviation of ≤ 0.5s/day. • NTP clock synchronisation over ethernet. • Features a Gregorian calendar with automatic adjustments for leap years and Daylight-Saving Time.
Firmware Upgrading	• Allows for firmware upgrades via both local and WAN interfaces. • Scheduled image updates.
Load Control	• Supports remote control • commands, over-current control,
Total Harmonics Distortion	• Up to 120 channels • LP1, LP2, PQ independent surveys • Up to 7 independent security levels • Up to 6 individual users • Support MODBUS for SCADA
Tariff Management	• Supports up to 8 tariffs and 200 programmable special days, including daily, weekly, monthly, and yearly scenarios. • Manages up to 32 separate import and export registers and up to 12 seasons. • Records up to 100 previous periods plus period totals.
Power Quality Indication	• EN 50160 Report • PQDIF Export • Power frequency • Magnitude of supply voltage & current • Flicker • Supply voltage sag and swell • Voltage interruption • Rapid voltage change • Unbalance supply voltage and current • Voltage and current harmonics • Voltage and current inter-harmonics • Main signalling on supply voltage • Measurement of under-deviation and over-deviation parameters
Profiles and Storage	• Offers at least 150 channels with support for 3 independent surveys and 24-hour daily surveys. • Programmable intervals ranging from 1 to 60 minutes, with storage for over 131,000 days storage (1 channel, 30min intervals)
Security	• Supports LLS with 3-level passwords for local and remote communication, and HLS with authentication and encryption for local and remote. • Compatible with suite 0 and suite 1 security standards.
Event Record	• Maintains comprehensive logs including fraud detection (meter cover, terminal cover, current reverse, magnetic detection), failure detection (memory error, relay error, battery low voltage), power quality events (under/over voltage, power up/down), security events (parameter changes, clock adjustments), and standard events.

Main Functionalities

Communication	• Optical Port: Complies with IEC62056-21 standard with DLMS (IEC62056-21 mode E) protocol support. • Plug & Play Module to support various communication technology. • 2x RJ45 RS485 with Power Supply • RS232 with Modem Power Supply (4W, 12VDC) • Built in Ethernet Port • HAN: Built in BLE Communication for SmartPhone Application
Additional Communication Ports	• RJ45 port (can be used as SCADA) • Phoenix terminal, 2 set connection
Protocol	• DLMS/COSEM • MODBUS • DL/T 645-2007 • DNP3.0 • IPv4/IPv6 • IEC 870-5-102

Technical Specification

Standards	• IEC 61000-42, 4-30 Class A • IEC 62052-11, 21, 31 • IEC 62053-22, 24, 61 • IEC 62056-21, 42, 46, 47, 4-7, 51, 5-3, 61, 6-2 • IEC 62059-32-1, SP-1618 • IEC 61850 • IEC/CISPR22 Class B • EN 61268, 13757, 50470-1, 50470-3
Rated Nominal Voltage Impulse Voltage	• 3x 57.7/100V~22V/240V~277/480V • 12kV
CT Range CT Limit	• 0.3(1.2)A, 0.3(6)A, 1(4)A, 1(6)A, 1(10)A, 5(6)A, 5(10)A, 5(20)A • 20 x Imax for 0.5 Seconds
Accuracy	• Cl.0.2S Active kWh • Cl.0.5S Reactive kvarh
Measurement	• 3 Phase 3 Wire • 3 Phase 4 Wire • Neutral Current Measurement
Rated Frequency Rated frequency (fn)	• 50Hz or 60Hz • ±5%
Power Quality input voltage Power Quality Flicker System	• 120V or 230V • 1260V / 60Hz or 230V / 50Hz
Auxiliary Supply	• 100 – 240VAC or 70 – 240VDC • Auxiliary or VT Priority (Optional)
Memory	• 128MB of non-volatile memory

Technical Specification

Power consumption in voltage circuit **Power consumption in current circuit**	• ≤10 VA • ≤0.5 VA
Input / Output	• 4x LED indicators • 4x passive inputs (5VDC/12VDC/24VDC/48VDC/110VAC/240VAC) • 6x S0 outputs (27VDC, 20mA rated) • Output pulse width: 1ms onwards (Pulsing)
Temperature **Normal Operation range** **Limit operation range** **Limit range for storage and transport** **Humidity**	• -25 to + 60 • -40 to +70 • -40 to +85
Accuracy	• Cl.0.2S Active kWh • Cl.0.5S Reactive kvarh
Rated Frequency **Rated frequency (fn)**	• 50Hz or 60Hz • ±5%
Pulse Constant (Configurable)	• Default: 10000 imp/kWh, 10000 imp/kvarh
Temperature **Normal Operation range** **Limit operation range** **Limit range for storage and transport**	• -25 to +60 • -40 to +70 • -40 to +85
Protection degree	• IP54 complies with IEC 60529 • Insulation grade II
Battery	• External lithium thionyl chloride battery (3.6V,1200mAh) • Internal super capacitor (5V) • Backup time: 15 years without power (lithium battery)
Lifetime	• ≧ 15 years

Diagram

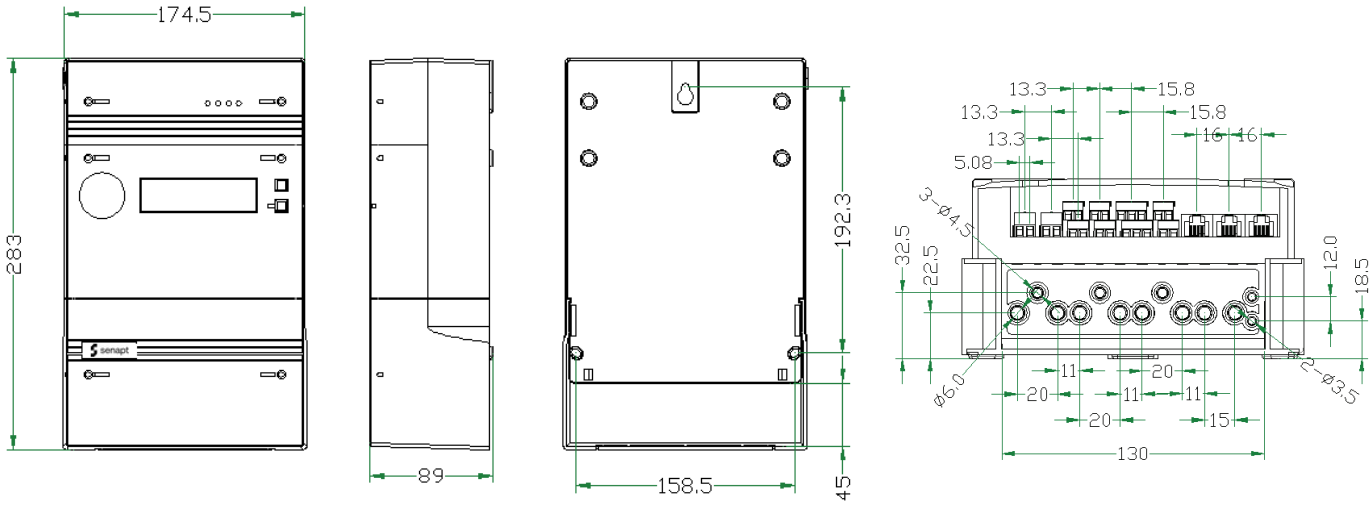

Wiring Diagram

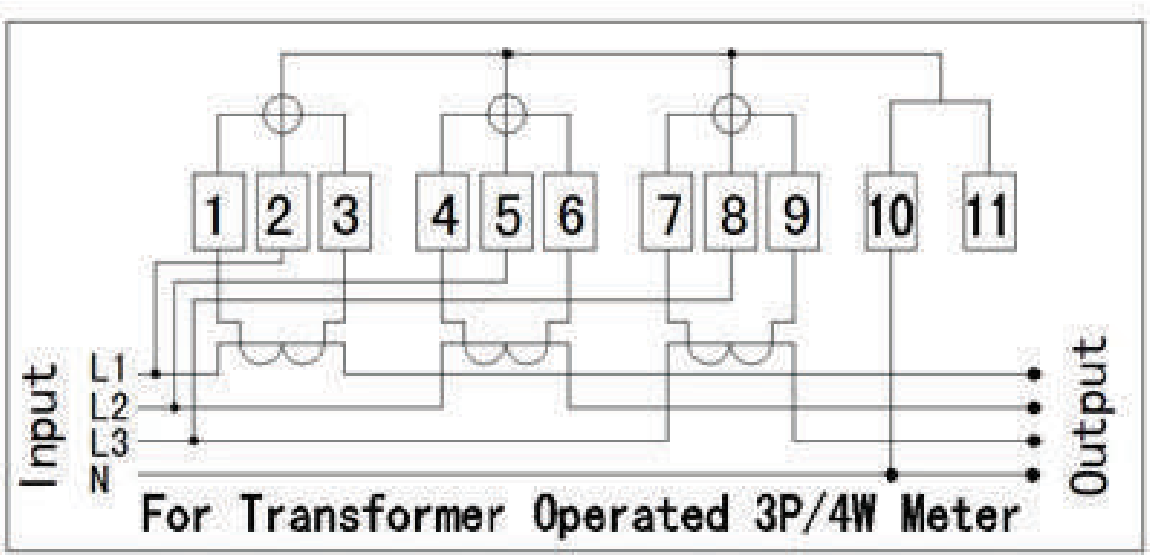

SENAPT AMI TRADING LLC
Office 2702, Fortune Tower, Cluster C,
Jumeirah Lake Towers, Dubai, United Arab Emirates
info@senapttrading.com www.senapttrading.com

Copyright © 2026 Senapt AMI Trading LLC. All Rights Reserved. All trademarks are the property of their respective holders. Senapt's Policy is one of continuous product development and the right is reserved to modify specifications contained herein without notice.